RP2100 MILLIVOLT PLUS... THE NON-STOP PERFORMANCE HEATER.

BENEFITS

- Capron® resin headers prevent rust stains from harming pool surface
- Plumb directly from provided 2" PVC threaded union
- Completely field serviceable
- No condensation to harm heater
- Small footprint
- High efficiency for economical operation
- Guaranteed high wind reliability
- Looks smart
- 5 Year Smart Warranty

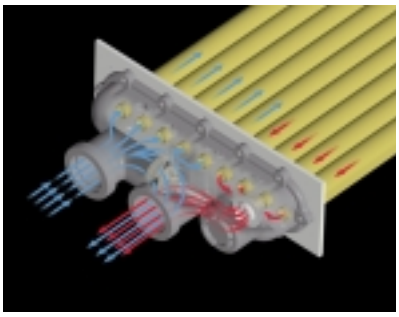

Raypak®
The Heater Company™

RP2100 MILLIVOLT PLUS - Swimming Pool Heater

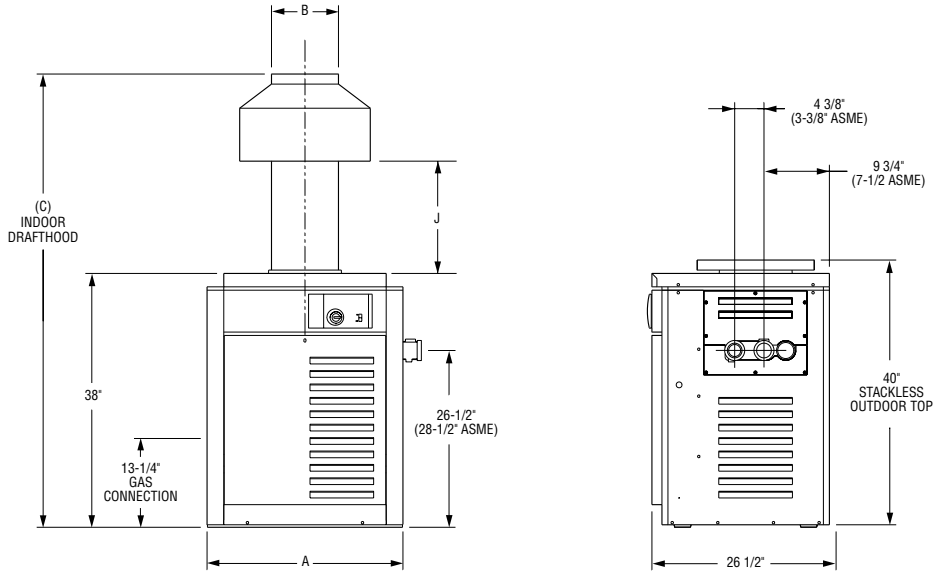

Heater Model*	BTU Input (000)	(A) Cabinet Width	(B) Flu Dia.	(C) Indoor Drafthood	(J)	Gas Conn.	Water Conn.	Shipping Weights (lbs)		
								Cast Iron Heater w/Stackless Top	Capron ® Heater w/Stackless Top	Indoor Draft Hood
R185A	181	18-1/4"	6"	62-5/8"	12-1/16"	3/4"	2"	191	172	12
R265A	264	22-3/8"	7"	62-7/8"	11-1/8"	3/4"	2"	214	195	15
R335A	334	25-3/4"	8"	63-3/4"	10-3/4"	3/4"	2"	234	215	17
R405A	399	29-1/4"	9"	65-3/8"	12-1/2"	3/4"	2"	253	234	20

* Designation for Propane is "MP" and Natural Gas is "MN". Above input ratings are per A.G.A. specifications. Reduce input 4% for each 1000 feet above sea level when installed above 2000 foot elevation. Manufactured under Patent No. 3,623,458.

How to Pick the Right Size Heater

Proper heater size is based on the time required to heat the pool or spa. If water is heated for each intended use, energy-saving rapid heating may be appropriate. If water is gradually heated to the desired temperature and then maintained at that temperature, a smaller heater may be acceptable. To determine proper heater size, use the following formula.

A. Desired water temperature _____ °F
B. (Minus) Average air temperature _____ °F
C. (Equals) Total heat rise _____ °F
D. Total heat rise/hours required to heat equals required heat rise per hour.
Use the charts below to find the appropriate heater for your pool or spa.

Heater Model	POOL SIZE-SQUARE FEET						
	300	400	500	600	700	800	1000
	DESIRED TEMP. RISE IN ° F PER HOUR						
R185A	1-1/2°	1-1/4°	1°	1°	3/4°	–	–
R265A	2°	1-3/4°	1-1/2°	1-1/2°	1°	3/4°	–
R335A	3°	2°	2°	1-3/4°	1-1/4°	1°	3/4°
R405A	3-1/2°	2-3/4°	2-1/2°	2°	1-1/2°	1-1/4°	1°

Heater Model	SPA/TUB SIZE-GALLONS						
	300	400	500	600	700	800	1000
	DESIRED TEMP. RISE IN ° F PER HOUR						
R185A	59	45	36	30	25	22	18
R265A	84	63	51	42	36	32	25
R335A	104	78	63	52	45	40	32
R405A	128	96	77	64	55	48	38

Raypak, Inc.
2151 Eastman Avenue, Oxnard, CA 93030, (805) 278-5300. Fax (800) 872-9725
Raypak Canada Limited
2805 Slough Street, Mississauga, Ontario, Canada L4T IG2. (905) 677-7999. Fax (905) 677-8036
www.raypak.com

Litho in U.S.A. ©1999 Raypak, Inc. Catalog No. 6000.13E Effective: 07-01-01 Replaces: 02-01-00

Raypak reserves the right to change these specifications without notice.